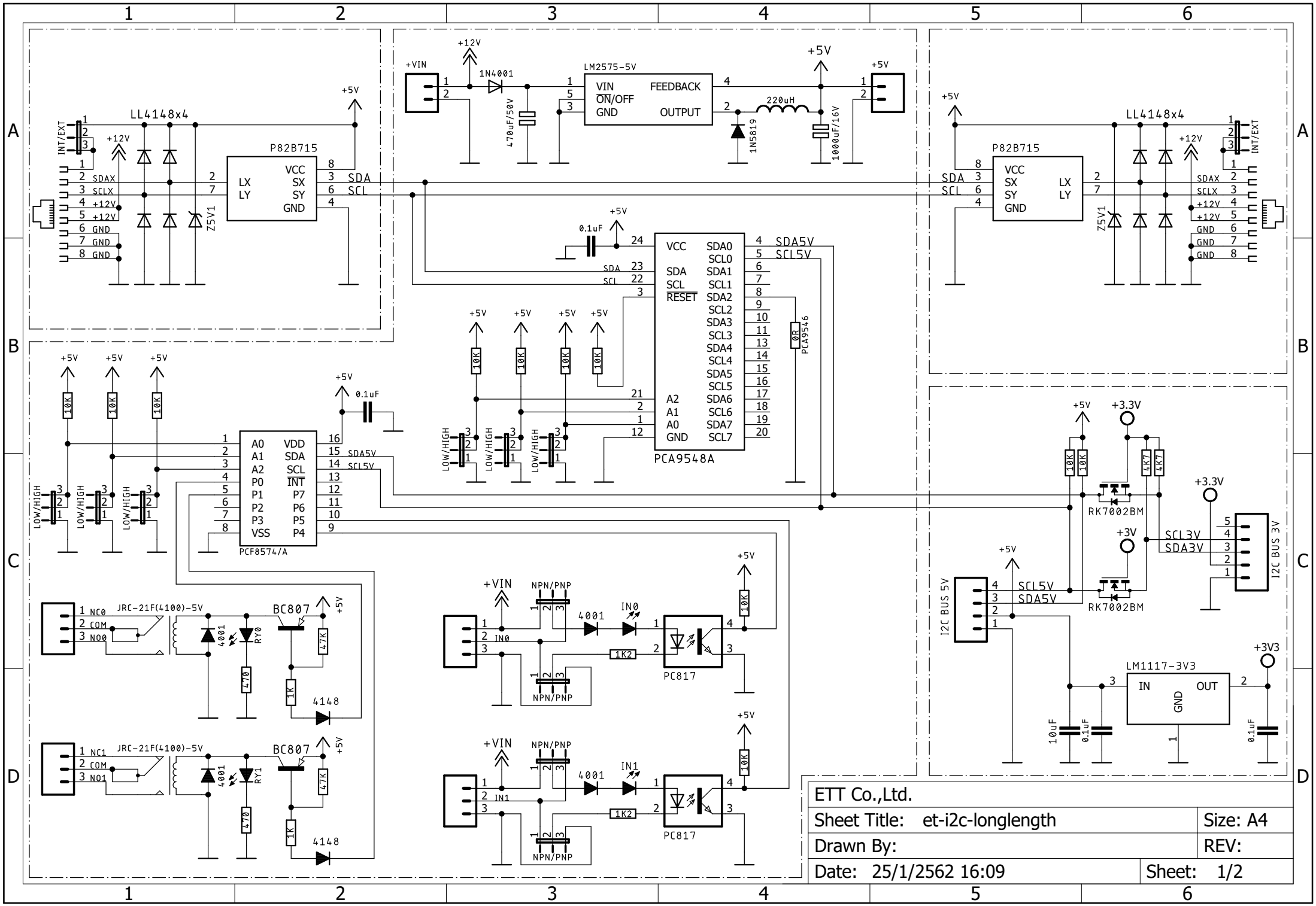


| | | |
|---|---|---|
| ETT Co.,Ltd. | | |
| Sheet Title: et-i2c-longlength | | Size: A4 |
| Drawn By: | | REV: |
| Date: 25/1/2562 16:09 | | Sheet: 1/2 |